NA2 | REF: CU4 AIG 2007999 / NBA3 | LKF

ASSIGNMENT

Date:

Veh No: SHA 3891A | Yr Regn: 22/OCT/2019

Type: M.Car / M.Cycle / BUS / Van / Lorry / Taxi / Prime Mover / Truck / Trailer or

Make: HYUNDAI IONIQ G3 | cc 1,581

Colour: BLUE | A/C: Insc'd / Std / Nil / NA

Sp Reading: 186,679 | T/Reg: Insured / S.C / Nil / NA

Engine:

Chas: KMHC851CVLU186596

Gen. Cond: Good / Fair / Poor / Burnt

Steering: Jammed / Locked / Burnt or

Brake: Jammed / Locked / Burnt or

Wheels: Nil / StRim / STD / AlRim or

Tyre Size: F: 195/65 R15

R: 11

BS / DUN / EXHOVA / GY / FS / LZA / MICHELIN / SU / TOYO / YOKO or WESTLAKE (F), DAVANTI (R)

Tread			Tread	
R/Bal	4	mm	R/Bal	4
L/Bal	4	mm	L/Bal	4
DOA	22/02/2021		DOA	23/02/2021

Survey held at: CDGE LOYANG

Dec. of Damages: Frt / Rear / O/S / N/S / U/C / Rooftop or

Tyre U/C / Chassis frame / Body Structure affected

AIG PIP

Excess:

N/S | O/S

Vehicle commenced at the time of inspection

Consistent? Yes or No

Consistent? Yes or No

3 days

Resd: Yes or No

Valid: Yes or No

24 HRS

Vehicle IN / OUT

Actions / Instructions

Days Of Repair:

Resurvey No. of Trip:

Survey Fee:

Transportation:

Prelim. Report

Final Report

Add Fee: Site Insp

Interview

Tech. Inve

Weekend

Scanned with CamScanner

Like AIG

COMFORTDELGRO ENGINEERING PTE LTD

REPAIR ESTIMATE

Date: 23.02.2021
Time: 10:53:05
Page: 1

COMPANY : THIRD PARTY'S CLAIMS (CAS)
CUSTOMER: 7010045
ADDRESS : COMFORT TRANSPORTATION PTE LTD
383 SIN MING DRIVE
SINGAPORE SINGAPORE 575717
65508755

JOB NO	:	305455055
REGN NO	:	SHA3891A
MILEAGE	:	0000000000
MAKE	:	HYUNDAI
MODEL	:	IONIQ(G3)
DATE OF REGN	:	22.10.2019
DATE/TIME IN	:	22.02.2021 14:25
ACCIDENT DATE	:	22.02.2021

JOB / PARTS DESCRIPTION — QTY IND UNIT-PRICE DISC% AMOUNT

PART REQUISITION

0001 04-01-0104-0592-G	PANEL ASSY-FRONT DOOR RH#	1	L	1,797.20	20.00	1,437.76	DEF
0002 04-01-0104-2468-G	MOULDING ASSY-W/LINE FRT	1	L	186.20	20.00	148.96	DEF
0003 04-01-0104-2572-G	GRIP-FRONT DOOR OUTSIDE R	1	L	234.80	20.00	187.84	DEF
0004 28-01-0103-0003-A	FRT DOOR LOGO COMFORTDELG	1	N	75.00	2.00-	75.00	NEC
0005 28-01-9999-2023-A	APP LOGO REAR DOOR L/R CT	1	N	80.00	0.20	80.00	NEC
0006 04-01-0104-2470-G	MOULDING ASSY-W/LINE RR D	1	L	166.20	20.00	132.96	DEF
0007 04-01-0104-0595-G	PANEL ASSY-REAR DOOR RH#	1	L	1,789.90	20.00	1,431.92	XR
0008 04-01-0104-0810-G	MOULDING ASSY-SIDE SILL R	1	L	290.00	20.00	232.00	DEF

SUB-TOTAL : 3,726.44

JOB NATURE

0000 23-01	TOWING FEE	60.00
0001 L	PANEL BEATING[repair rr fender Rh]	~~900.00~~ 700
0002 23-502	SPRAYPAINT ON AFFECTED AREA	850.00

Scanned with CamScanner

COMFORTDELGRO ENGINEERING

ComfortDelGro Engineering Pte Ltd
205 Braddell Road Singapore 579701
Mainline + 65 6383 6280 Facsimile + 65 6280 9755
Workshops
205 Braddell Road Singapore 579701
59 Loyang Drive Singapore 508969
383 Sin Ming Drive Singapore 575717

Date/Time: 23.02.2021 09:46 Page : 1

Team: ARC Repair TP(CLSO)1

JOB CARD

Sales Order: 4061477 JC NO.: 305455055

TOMER

AS COMFORT TRANSPORTATION PTE LTD
TOMER NO. 7010045
RESS 383 SIN MING DRIVE
Singapore SINGAPORE 575717
(R) 65508755 (O)
(P)

OUNT CARD NO.

AIG

REGN NO.: SHA3891A	MILEAGE
MAKE : HYUNDAI	FUEL E.....1/2.....F
MODEL IONIQ(G3)	DATE/TIME IN 22.02.2021 14:25
YR OF MANU. 22.10.2019	TARGET DATE
CHASSIS CODE KMHC851CVLU186596	COMPLETION DATE/TIME:

JOB DESCRIPTION

Accident Date: 22.02.2021
NATURE: 3P 22.02.2021

S/NO	LABOR CODE	DESCRIPTION
000010	23-01	TOWING FEE — $60

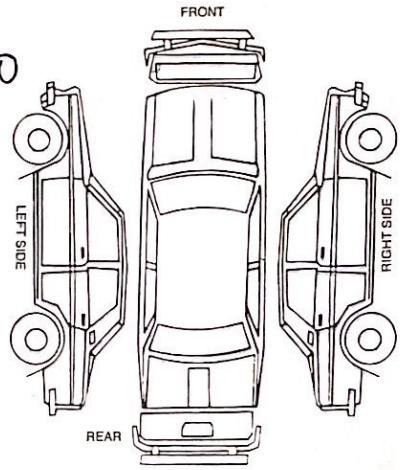

CKED & PASSED OUT BY:

SERVICE ADVISOR

CUSTOMER'S SIGNATURE

ledgement Slip

Exit Pass

No.: SHA3891A LKE

Taufiqh

Vehicle No.: SHA3891A

f Service Advisor

Signature/Date

Name of Service Advisor

Date

turned to Service Reception upon collection

To be kept by Security Guard

Scanned with CamScanner

COMFORTDELGRO ENGINEERING

ComfortDelGro Engineering Pte Ltd
205 Braddell Road Singapore 579701
Mainline +65 6380 6280 Facsimile +65 6280 9755
Service Centres
205 Braddell Road Singapore 579701 59 Loyang Drive Singapore 508969
45 Pandan Road Singapore 609256 383 Sin Ming Drive Singapore 575711
7 Sungei Kadut Way Singapore 728791 320 Ubi Road 3 Singapore 408649

6553 1111
SPARK Assist
Recovery • Towing • Accident

Appointed Partners

JOB REQUISITION FOR BREAKDOWN / TOWING SERVICE

Job Requisition

1. Date: 22/2/21 Time Received: 1540

2. ☐ New ☐ SPARK Kakis

Name of Customer : LAU

Contact No. : 96231173

Vehicle No. : SHA3881A

Make / Model / Colour :

Email : IONIQ

3. Vehicle Type:
- ☐ Private
- ☑ Taxi (CTPL/CCPL)
- ☐ Fleet
- ☐ STK (Boon Lay)

4. Type of Towing:
- ☑ Normal Tow
- ☐ King Dolly
- ☐ Flat Bed
- ☐ Crane-up

5. Nature of Service:
- ☐ Jumpstart
- ☑ Recovery
- ☐ Change Tyre / Battery

6. Parts Replaced/Remarks:

7. Location: 156 Meyer RS

8. Vehicle Tow - In Workshop:
- ☐ Smoky Exhaust
- ☐ Overheating
- ☐ Brake Faulty
- ☐ Starting Problem
- ☑ Accident
- ☐ Return Taxi
- ☐ Wheel Jammed
- ☐ Steering Faulty
- ☐ Alternator Faulty
- ☐ Loss Power
- ☐ Engine Stalled

9. Preferred Workshop:
- ☐ Braddell
- ☐ Sin Ming
- ☐ Komoco (UBI / Leng Kee)
- ☐ Others:
- ☑ Loyang
- ☐ Sungei Kadut
- ☐ Pandan
- ☐ Ubi
- ☐ Cycle & Carriage (PD)

10. Odometer Reading :

Fuel Level : F | 1/4 | 1/2 | 3/4 | E

11. Radio / CD Player
- ☐ OK
- ☐ Faulty
- ☐ Not tested

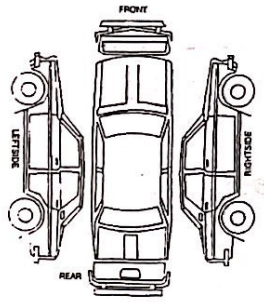

#: Cracked X: Dented
/: Scatched O: Missing

Signature of Customer

Job Attended

12. Tow Truck / Recovery Van : ☐ VRS ☑ QA ☐ GAO ☐ OTHERS

Name of Driver : Joe

Vehicle No. : TQ1675

Time Dispatch : 1560

Time of Arrival : 1610

Time Completed : 1650

Cash Invoice Details (if applicable)

13. Cash Invoice No. :

Customer Acknowledgement

1. I have been advised to remove all valuable items in my vehicle, including Global Positioning System (GPS), audio compact disk, thumbdrive, carpark coupons, cash cards, spectacles, pen, etc.
2. I understand that any items left behind are at my own risk and SPARK Car Care™ will not be held liable for such losses.
3. Surcharge: Towing fee will be levied if the customer decides neither to tow nor proceed with the repairs in SPARK Car Care™.

22/2/21	1610	
Date	Time	Signature of Customer

4. WORKSHOP

Name of Attending Staff/Guard	Date & Time of Arrival	Signature of Attending Staff/Guard

CUSTOMER'S COPY

Scanned with CamScanner