22/02/2020

A.S. REC. BY: | REF: CS/TMI20000374/Fad302 | Special Instruction: ok

Synopsis: Ram

Meiman

ASSIGNMENT (Office)

From (Person): Telma Gomez of TMI Date/Time: 7/1/2019 @ 9.29am

Estimated Cost: Bill to:

OD / TP / WS / TP RES / OD RES / EVA / INV / MV / CS

To Inspect Vehicle No: SHB 4356S Insured: SLF 9710B

at Workshop m/s comfortdelgro Tel: 6214 8300

of Saloyang Drive

Policy No: MK 000578 Claim No: M2000137

Sum Insured: Excess:

Make of Veh: D.O.A. 05/01/2020
(Client's Record)

CA / REV / REP. / REV 24 HRS H.O.D. Endorsement:

Date/Time: 9.32am @ 7/1/2020 Person Contacted: Leiny Vehicle IN / OUT

Date/Time	Action/Instruction
	Telmo G
	SHB 4356S - CS/SM0180168 85/Daba 2 DOA: 14/09/2018
	SLF 9710 B - X.
07/1/20@	1.56pm revised to Telma Gomez via Meiman.

Ram

ASSIGNMENT

From: Date:

Estimated Cost:

OD / TP / WS / TP RES / OD RES / EVA / INV / MV

To inspect Vehicle No:

at Workshop m/s

of

Insured:

Policy No.:

Claims No.:

Sum Insured: Excess:

(Client's Record)

Make of Veh:

(Policy Condition)

N/S	O/S

Remark: The veh had commenced its repair at the time of inspection.

Bal. or Market Value:

IDAC Accident Rport: Consistent? : Yes or No

GIA / PR Seen: Consistent? : Yes or No

Est. Repairs: 2 days Res.: Yes or No

Lum Sum: % 3 Val.: Yes or No

CA / REV / REP. / 24 HRS

Vehicle: IN / OUT

Date: Person Contacted:

Veh No: SHB4356S Reqn: 25/06/2015

Type: M.Car / M.Cycle / Bus / Van / Lorry / Taxi / Prime Mover / Truck / Trailer or

Make: Hyundai i40 c.c 1685

Colour: blue A/C: Insured / Std / NI / NA

Sp.Reading: 570186 T/Radio: Insured / Std / NI / NA

Eng/No: -

C/No: KMHLB41UMGU075122

Gen. Cond: Good / Fair / Poor / Burnt

Steering: Inorder / Jammed / Leaked / Burnt or

Brake: Inorder / Jammed / Leaked / Burnt or

Modi: Nil / S/Rim / STD A/Rim or

Tyre Size: F: 205/60R16

R: -

BS / DUN / EXNOVA / GY / FS / LIZA / MIC / OHTSU / PIR / SUMI / TOYO / YOKO or WESTLAKE

Front		Rear	
R/Bal.	6 mm	R/Bal.	6 mm
L/Bal.	6 mm	L/Bal.	6 mm

D.O.A. 05/01/2020 D.O.I. 06/01/2020

Survey held at comfortdelgro (Loyang)

Des. of Damages : Frt / Rear / O/S / N/S / U/C / Rooftop or rear

The U/C / Chassis frame / Body Structure affected due to collision

Date / Time	Action / Instruction
	TMI L/S
	RECEIVED 22 JAN 2020
	L/S: $1400/= with 2 repair days (Ded $884.30, 39%)
	Confirm on 20/1/2020 with Lim Kwok Eng

Date/Time, File Pass to: [ ] : Preli. Report

[ ] : Final Report

Date/Time, File Return to:

Days Of Repair: 2

Resurvey No. of Trip: 1

Add Fee: [ ] : Site Insp. ($

[ ] : Interview ($

[ ] : Tech. Insp. ($

[ ] : Mediator

MER-TP

1400

Survey Fee	250
Transportation	
Photo	
Other	11
Total	261

COMFORTDELGRO ENGINEERING

ComfortDelGro Engineering Pte Ltd
59 Loyang Drive Singapore 508969
Fax: 6546 8156

Our Job Ref No 305372068

Date : 18.01.20

FINALIZATION FORM

To : LKK Fax :

Attn : Mr RAM

Vehicle Reg No. SHB4356S CTPL 05.01.20

The survey and estimates of the repairs of the above-mentioned vehicle are as follows:-

1. The repair job shall bill to: **TOKIO MARINE --- SLF9710B**

2. The finalized amount shall be:

   (a) Spare Parts after List discount

   (b) Labour Charges

   Total for Part-By-Part Repair Cost

   (c.) Lumpsum Repair (if applicable)
   Total for Lumpsum repair cost after Less: 20% $1,400.00
   Final Lumpsum Repair cost **$1,400.00**

3. Estimated normal period for repairs: 2 working days.

4. **We shall treat the above amount as Correct and Confirmed if there is no reply from you within 7 working days**

5. Thank you for your assistance.

Signature :

Name : LIM KWOK ENG

Tel : 62148316

Fax : 65468156

We confirm the estimates and finalized amount

Signature :

Name : Ram

Date : 20/1/2020

For Official Use Only

Item	Amount	Document Attached Yes or No	Confirm By (Signature)	Remarks
1. Rental Rate P/Day		YES		
2. Loss of Income Paid		NO		
3. Survey Fees				
4. LTA Search Fee	$7.49			
5. Medical Fees (on behalf of driver, if applicable)				
6 Overrun				

Remarks:

ComfortDelGro Engineering Pte Ltd

REPAIR ESTIMATE

DATE: **06.01.2020**

INSURANCE: Tokio Marine

MODEL: **HYUNDAI SONATA-I40 (REAR)**

MVA: Lee

VEHICLE NO.: **SHB 4356S**

PART NO.	DESCRIPTION	QTY	LIST PRICE	REMARKS
	REAR BUMPER DEF		$503.00	
	REAR BUMPER CLIP rec		$22.00	
	REAR BUMPER UNDER COVER xnn		$228.00	
	BOOTLID I40 EMBLEM (I40) rec		$22.00	
	CRDI EMBLEM rec		$22.00	569.00
	~~Rt~~ Bootlid RX (R)			-20%
	SUB TOTAL		**$797.00**	455.20
	LESS 20%		**$159.40**	
	DISCOUNTED TOTAL		**$637.60**	
	REAR BUMPER RESERVE SENSOR xnn		$135.70	NETT
	REAR BUMPER ADVERTISEMENT LOGO rec		$50.00	NETT
	REAR FENDER ADVERTISEMENT LOGO (LH/RH) rec		$200.00	NETT 250
	Labour Charge			
	Panel Beating		$600.00	$560
	Spray Painting Charge		$400.00	—
	Wiring Charge		$50.00	xnn
	Tuff Kote		$80.00	$30
	Remove/Refix Reverse Sensor		$120.00	$50
5	Merimen Charge		$11.00	1,051
	TOTAL LABOUR		**$1,250.00**	1,756.2
				-20%
	ESTIMATE TOTAL		**$1,887.60**	1,404.96

This is an initial estimate based on a visual inspection of the above vehicle. The final repair quantum will be prepared after the vehicle is surveyed by a motor Surveyor appointed by the insurance company.

Ram (LKK)
06/01/2020 1545hrs
Parasuram@lkkauto.com
88622728 hp
LIS #1,400
3 repair days
after repair
pkt

...CLAIM SUBFOLDER...(New Assignment)

CLAIM SUBFOLDER TRACKING

Case	Notified	Est Submitted	Adj Assigned	Adj Rpt	Adj Submitted	Ins Auth'ed	Status
Main	06 Jan 2020 19:47 Sendback Est	06 Jan 2020 19:56 **S$2,284.30**	07 Jan 2020 09:29 Assign				**New Assignment** Cancel Case

Main | Reference | Claim Details | Documents | Show All

CLAIM SUBFOLDER DETAILS

Insured:	**LION CITY RENTALS PTE LTD**, Co. Reg. No.: 201504621K		
Main Claimant:	**CTPL**		
Vehicle Reg. No.:	**SHB4356S**	Date of Loss:	05/01/2020 17:00 - :59 [**54** Months and **11** Days From LTA Reg Date (Man Yr)]
Claim Type:	**TP** / M2000137	Policy/Cover Note No.:	MK000578 (Third Party Only) Coverage: 25/06/2019 - 24/02/2020
Vehicle Reg. No. (Insured):	**SLF9710B**	Policy No. (Claimant):	
		Excess:	S$1,600.00
Repairer:	**ComfortDelGro Engineering Pte Ltd (Loyang)** 59 Loyang Drive, 508969 Loyang - Tel: 6214 8300		
Handling Insurer:	**Tokio Marine Insurance Singapore Ltd (HQ)** - Tel: 6221 6111 ... [Handled by **Telma Gomez** - 65926402]		
Adjuster:	**LKK Auto Consultants Pte Ltd (HQ)** - Tel: 6256-3561 ... [**Final Rpt** due 16/01/2020]		

ASSOCIATED MAIL RECEIVED

View All | Compose Case Mail

There are no mail for this case.

ALL ASSOCIATED TASKS

View All | Search Tasks | Create New Task | Complete

Due Date	Priority	Type	Task Group	Subject	Handler	Assigned By	Completed On	Created On	Done?

No results.

Note: This document has not been finalised.

LKK Auto Consultants Pte Ltd (Co.Reg.No:199607198R)
51 Ubi Ave 1 #01-25, Paya Ubi Industrial Park
Singapore 408933
Tel: 6256-3561 Fax: 6844-8805 Email: sur@lkkauto.com;assignments@lkkauto.com

To: Tokio Marine Insurance Singapore Ltd
20 McCallum Street
#09-01 Tokio Marine Centre
Singapore 069046

From: LKK Auto Consultants Pte Ltd
51 Ubi Ave 1 #01-25
Paya Ubi Industrial Park
Singapore 408933

Attn: Telma Gomez

Date: 07 Jan 2020

Preliminary Advice

Insured Vehicle No	: SLF9710B		
TP Vehicle No	: SHB4356S	Accident Date	: 05/01/2020
Make	: HYUNDAI I40	Assignment Date	: 07/01/2020
Date of Inspection	: 06/01/2020	Est. Duration of Repair	: 3.00
Inspection At	: COMFORTDELGRO ENGINEERING PTE LTD (LOYANG) 59 LOYANG DRIVE SINGAPORE 508969		

Point of Impact / General Description of Damages

The vehicle sustained impact / damages rear portion and parts claimed are consistent to the accident.

Repairer's Estimate (Gross)	:S$	2,284.30
Revised Amount	:S$	1,756.20
Check Items (Estimated)	:S$	135.70
Total	:S$	1,891.90
Lump Sum Repair	:S$	

Total Loss Consideration

New for Old Value	:S$
Pre-Accident Value	:S$
COE / PARF Rebate	:S$
Salvage Value	:S$
Margin for Repair	:S$

Remarks

( ) The vehicle is repairable at our adjusted amount. We have also confirmed excess and policy coverage. Kindly let us have your authorisation.

( ) The vehicle is uneconomical to be repaired, you are advised to invite tender for the wreck.

( ) Other comments :

SINGAPORE ACCIDENT STATEMENT

IMPORTANT NOTICE

1. Please report correctly the details of the accident to speed up the claims process.
2. This Form must be completed by the Policyholder and/or the Authorised Driver.
3. Information provided must be as truthful and accurate as possible. Any wilful misrepresentation or witholding of material facts may allow insurance companies to repudiate policy liability.
4. The issue and acceptance of this Form by insurance companies is not an admission of policy liability on the part of the insurance companies.
5. **Any false reporting may be referred to the Police for investigation.**
6. This report will be forwarded by the insurers of the GIA Records Management Centre established by the General Insurance Association of Singapore (GIA) for archiving and that copies of this report will, for a fee, be made available upon application by interested parties.
7. By the lodgement of this report to the insurers, you hereby consent to the archiving of this report at the centre and to copies of the report being made available aforesaid.

ACCIDENT STATEMENT

Date Of Report	06/01/2020 11:57
Date Of Accident	05/01/2020 16:50
Exact Location Of Accident	ALONG HOUGANG AVE 1 TOWARDS TAMPINES RD
Country/State of Loss	SINGAPORE

DETAILS OF OWN VEHICLE

Vehicle Registration Number	SHB4356S
Insured/Policyholder	
Name Of Registered Owner	COMFORT TRANSPORTATION PTE LTD
Co Reg No	1XXXXX821R
Email Address	FLEETSAFETY@CDGTAXI.COM.SG
Mobile Phone No	
Alternative Phone No	OFFICE-65508768
Vehicle Particulars	
Manufacturer	HYUNDAI
Model	I40
Exact Purpose for which vehicle was being used at time of accident	
Are you claiming under your own insurance policy for repair to your vehicle?	NO
If No, Please state action to be taken	THIRD PARTY
Vehicle Category	TAXI
Insurance Company	
Name of Insurance Company	MS FIRST CAPITAL INSURANCE LTD
Type Of Coverage	THIRD PARTY FIRE AND/OR THEFT
Fleet Policy	YES
Policy Number	D-18088936MFSH
Cover Note Number	
Driver	
Name of Driver	SIM CHENG LAI
NRIC No	SXXXX864I
Date Of Birth	06/07/1964
Occupation	OUTDOOR
Date Of Driving Pass	03/11/1989
Driving Experience	30 YEARS AND 2 MONTHS
Gender	MALE
Mobile Number	(LOCAL) +65-90251797
Fax Number	
Contact Number	
EMail Address	NOEMAIL

Address	BLK 543 ANG MO KIO AVENUE 10 #11-2302
Postcode	560543
Was driver an employee of the Insured's Company	NO
If No, Relationship of the Driver with the Insured	OTHER - TAXI DRIVER
Vehicle Registration Number of Driver's Own Vehicle	- - -
Insurance Company of Driver's Own Vehicle	- - -

General Information of the Accident

Type Of Accident	COLLISION - HEAD TO REAR
Weather Conditions	CLEAR
Road Surface	DRY

Other Information

Was any foreign vehicle involved in this accident?	NO
Number of vehicles (including own vehicle) involved in the accident	2
Was any body injured in the Accident?	YES
Was any injured conveyed to hospital by ambulance?	NO
Was any other material or property damaged?	YES
I have been approached by unknown person(s) soliciting/offering accident claims assistance.	NO
Number of Passengers (Including Driver)	4
Passenger 1	NAME: : - GENDER: : MALE
Passenger 2	NAME: : - GENDER: : MALE
Passenger 3	NAME: : - GENDER: : FEMALE

Details of Police Action

Was the accident reported to the police?	NO
If Yes,Please state which Police Station	
Was notice of intended Prosecution given?	NO
If Yes,against whom?	

Circumstances of Accident

REFER ATTACHED

Attachment(s)

Are accident photos available for attachment?	YES
Was there any video captured by Car Camera?	YES
Remarks/ Reasons:	-
Was there any audio recorded?	NO

DETAILS OF OTHER VEHICLE PROPERTY 1

Vehicle Registration Number	SLF9710B
Vehicle Make/Model/Colour	MAZDA
Details Of Properties	
Vehicle Category	PRIVATE CAR
Name of Driver	UNKNOWN

NRIC/Passport Number	
Contact Number	
Address	
Postcode	
Insurance Company Name	
Nature Of Damage	FRONT
No. Of Passenger (Including Driver)	

DETAILS OF INJURED PERSON 1

Name	SIM CHENG LAI
Approximate Age	
Injuries Sustain	BACK
Injured person in which vehicle?	SHB4356S
Were seat belts worn?	YES
Was this injured conveyed to hospital by ambulance?	NO
Address	
Postcode	

IMPORTANT NOTICE

1. Please report **correctly** the details of the accident to speed up the claims process.
2. This Form must be **completed by the Policyholder and/or the Authorised Driver**.
3. Information provided must be as **truthful and accurate as possible**. Any wilful misrepresentation or withholding of material facts may allow insurance companies to **repudiate policy liability**.
4. The issue and acceptance of this Form by insurance companies is not an admission of policy liability on the part of the insurance companies.
5. **Any false reporting may be referred to the Police for investigation**.
6. The report will be forwarded by the insurers of the GIA Records Management Centre established by the General Insurance Association of Singapore (GIA) for archiving and that copies of this report will for a fee be made available upon application by interested parties.
7. By the lodgment of this report to the insurers, you hereby consent to the archiving of this report at the centre and to copies of the report being made available aforesaid.
8. **Consent under the Personal Data Protection Act (PDPA)**

   I understand, acknowledge, agree and consent that:

   (a) My insurer, my workshop and the General Insurance Association of Singapore ("**GIA**") may/are permitted to collect, use, disclose and/or process my personal data/personal information set out in this [form] and any other personal information provided by me or possessed by my insurer (collectively the "**Personal Information**") and disclose and transfer such Personal Information to all insurer(s) who have insured vehicle(s) involved in this accident (all insurer(s) who have insured vehicle(s) involved in this accident shall be collectively referred to as the "**Insurers**"), the Insurers' lawyers/law firms, the Monetary Authority of Singapore and any relevant government agency/authority (such as the police), for the purpose(s) of :

   (i) processing, handling and/or dealing with my claims including the settlement of the claims and any necessary investigations relating to the claims;

   (ii) investigating the accident and/or my claims;

   (iii) carrying out and/or dealing with my instructions or responding to any enquiries by me;

   (iv) administering my claims (including the mailing of correspondence, statements, invoices, reports or notices to me, which could involve disclosure of certain personal data about me to bring about delivery of the same as well as on the external cover of envelopes/mail packages); and/or

   (v) complying with applicable law in administering, processing, handling and/or dealing with my claims.(collectively the "**Purposes**")

   (b) all insurer(s) who have insured vehicle(s) involved in this accident and the Insurers' lawyers/law firms, may/are permitted to collect, use, disclose and/or process my Personal Information for one or more of the above Purposes; and

   (c) my Personal Information may/can be disclosed by any of the Insurers and/or GIA to their third party service providers or agents(including their lawyers/law firms), which may be sited outside of Singapore, for one or more of the above Purposes.

   (d) my Personal Information will also be collected and used to compile claims history for the purpose of fraud detection, investigation and management in present and all future claims.

   (e) the information so collected under (d) above may be shared / disclosed:

   (i) to all insurers and/or any other third parties that assist in evaluating, investigating, controlling or managing fraud, regulators, law enforcement and government agencies as reasonably required for the purposes stated, or

   (ii) for complying with requirements under any regulations, laws or court orders.

Policyholder's Signature Date & Time:	Driver's Signature (If driver is not the policyholder) Date & Time:	Olivia Wen Reporting Centre Personnel's Signature Name: NRIC/FIN No.: 16 JAN 2020

SKETCH PLAN

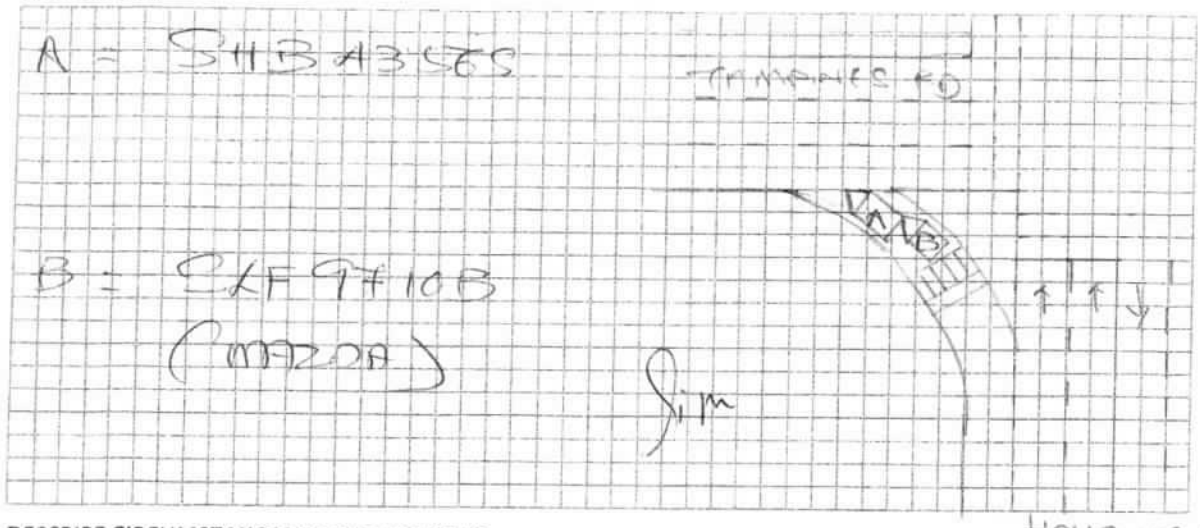

DESCRIBE CIRCUMSTANCES OF THE ACCIDENT

Statement as per attached.

DECLARATION

I/We declare the foregoing particulars are true in every respect.

Olivia Wen

Policyholder's Signature Date & Time:	Driver's Signature (If driver is not the policyholder) Date & Time:	Reporting Centre Personnel's Signature Name: NRIC/FIN No.:

Describe Circumstances of the Accident.

On the 05/01/2020 at about 16:50hrs, I was driving along Hougang Ave 1 slip road towards Tampines Rd direction with 3 passenger on board my taxi.

As I approached the give way line, I stop to checked the traffic is clear from incoming vehicle before I drive out when there's an impact from behind my taxi. So I step out to checked and found out a vehicle of SLF9710B front portion had collided onto my rear right portion of my taxi.

I felt slight back pain and will consult doctor later.

Declaration

I/We declare the foregoing particulars are true in every respect.

	Lim	Olivia Wendy
Policyholder's Signature/Date & Time	Driver's Signature(If driver is not the policyholder)/Date & Time	Witnessed by Reporting Centre Personnel

06 JAN 2020

CRDi
06/01/2020 11:39

om.sg/netsclick
06/01/2020 11:39

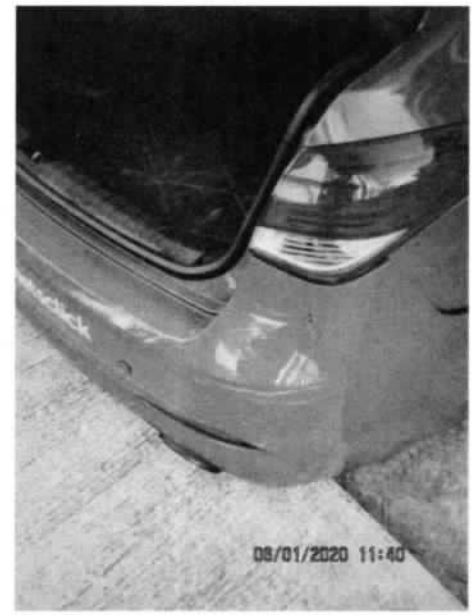
06/01/2020 11:40

2020 11:40

NETS
06/01/2020 11:40

SLF9710B

PAY FOR YOUR
SHB 4356S
L40
www.nets.com.sg

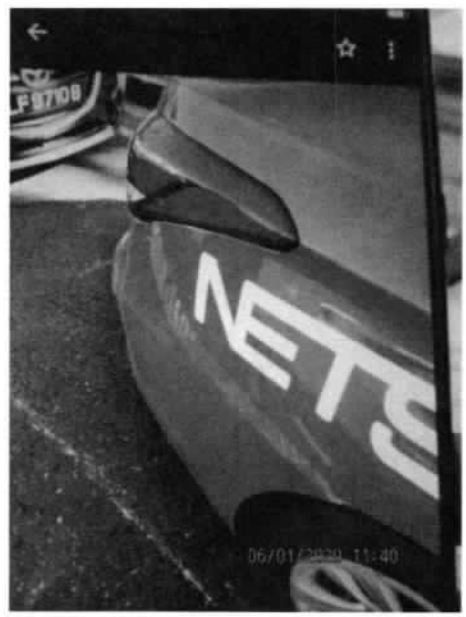
NETS
06/01/2020 11:40

SLF9710B

5568

NETS
06/01/2020 11:40

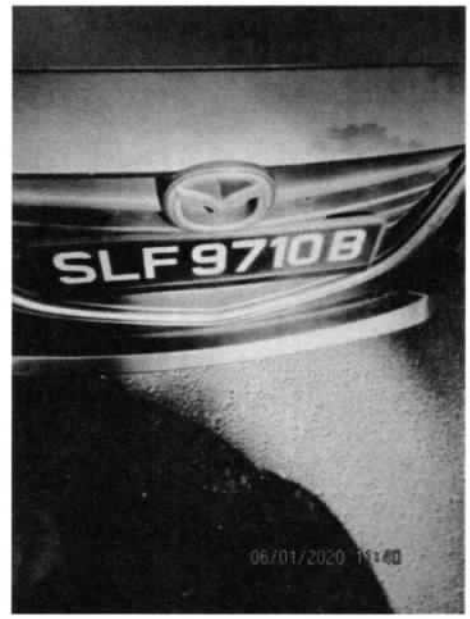
SLF9710B
06/01/2020 11:40

OMFORTDELGRO
ENGINEERING

member of COMFORTDELGRO

ComfortDelGro Engineering Pte Ltd
205 Braddell Road Singapore 579701
Mainline : 65 6383 6280 Facsimile : 65 6280 9755
Workshops
59 Loyang Drive Singapore 508969
383 Sin Ming Drive Singapore 575717
45 Pandan Road Singapore 609286
24 Senoko Loop Singapore 758156
7 Sungei Kadut Way Singapore 728791
501 Yishun Industrial Park A Singapore 768732

Date/Time: 06.01.2020 14:23 Page : 1

Team: ARC Repair TP(CLSO)1 **JOB CARD** Sales Order: JC NO.: 305372068

OMER		REGN NO.: SHB4356S	MILEAGE
S	COMFORT TRANSPORTATION PTE LTD	MAKE: HYUNDAI	FUEL E.....1/2.....F
OMER NO.	7010045	MODEL I-40	DATE/TIME IN 05.01.2020 20:00
ESS	383 SIN MING DRIVE Singapore SINGAPORE 575717	YR OF MANU. 25.06.2015	TARGET DATE
(R) (P)	65508755 (O) Tokio Marine	CHASSIS CODE KMHLB41UMGU075122	COMPLETION DATE/TIME:
UNT CARD NO.			

JOB DESCRIPTION

Accident Date: 05.01.2020
NATURE: 3P 05.01.2020

S/NO	LABOR CODE	DESCRIPTION

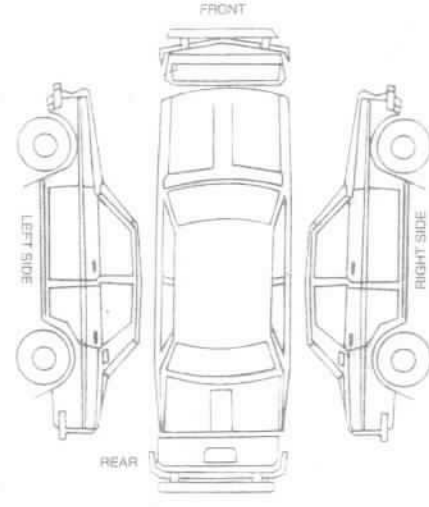

ED & PASSED OUT BY:

SERVICE ADVISOR

CUSTOMER'S SIGNATURE

dgement Slip

o.: SHB4356S LKE RAM

Service Advisor

Signature/Date

rned to Service Reception upon collection

Exit Pass

Vehicle No.: SHB4356S

Name of Service Advisor

Date

To be kept by Security Guard

ComfortDelGro Engineering Pte Ltd

REPAIR ESTIMATE

DATE: **06.01.2020**

INSURANCE: Tokio Marine

MODEL: **HYUNDAI SONATA-I40 (REAR)**

MVA: LKC

VEHICLE NO.: **SHB 4356S**

PART NO.	DESCRIPTION	QTY	LIST PRICE	REMARKS
	REAR BUMPER DEF		$503.00	
	REAR BUMPER CLIP rec		$22.00	
	REAR BUMPER UNDER COVER xnn		$228.00	
	BOOTLID I40 EMBLEM (I40) rec		$22.00	
	CRDI EMBLEM rec		$22.00	
	~~Rt~~ Bootlid ~~R~~ x (R)			
	SUB TOTAL		**$797.00**	
	LESS 20%		**$159.40**	
	DISCOUNTED TOTAL		**$637.60**	
	REAR BUMPER RESERVE SENSOR ~~1~~ xnn		$135.70	NETT
	REAR BUMPER ADVERTISEMENT LOGO rec		$50.00	NETT
	REAR FENDER ADVERTISEMENT LOGO (LH/RH) rec		$200.00	NETT
	Labour Charge			
	Panel Beating		$600.00	$560
	Spray Painting Charge		$400.00	—
	Wiring Charge		$50.00	~~xx~~ xnn
	Tuff Kote		$80.00	$30
	Remove/Refix Reverse Sensor		$120.00	$50
	TOTAL LABOUR		**$1,250.00**	
	ESTIMATE TOTAL		**$1,887.60**	

This is an initial estimate based on a visual inspection of the above vehicle. The final repair quantum will be prepared after the vehicle is surveyed by a motor Surveyor appointed by the insurance company.

LKK Auto Consultants hence notify the Repairer of the following:
- To resurvey before/after spray painting
- To display damaged part(s) during resurvey
- Parts prices are subject to confirmation
- Third party survey is on a "Without Prejudice" basis
- No illegal modification(s) is allowed
- Supplementary item(s) must be resurveyed and is subject to final approval from Insurance Company

Acknowledged by Repairer
Signature:
Date:

7/1/2020
Ram (LKK)
06/01/2020 1545hrs
paraswami@lkkauto.com
88622728 hp
LIS
3 repair days
after repair photo

ComfortDelGro Engineering Pte Ltd (Co.Reg.No:199506048W)

59 Loyang Drive
Singapore 508969
Tel: 6214 8300

TP INSURER: **Tokio Marine Insurance Singapore Ltd (HQ)**
CTPL

Singapore

PARTICULARS OF CLAIM

Claim Type:	THIRD PARTY	Ref. No:	
Policy No:		Date of Loss:	05/01/2020
Vehicle Reg. No.:	**SHB4356S**	Driveable?	YES
Party At Fault:	UNKNOWN		

Make/Model:	HYUNDAI I40, 1.7 D CRDI (A)	Vehicle Reg. Date:	25/06/2015
Vehicle Colour:	BLUE	Gen Condition:	GOOD
Engine No:	D4FDFU528760	Chassis No:	KMHLB41UMGU075122
Odometer:	0 KM		

Paint Type:	
List Item Discount:	20.00 %
Total Loss?	**NO**
Est. Duration of Repair (day)	3

Present Location: COMFORTDELGRO ENGINEERING PTE LTD (LOYANG)

COST OF CLAIMS	**Amount**
Parts	1,023.30
Miscellaneous Items	11.00
Labour	1,250.00
Paintwork Labour	0.00
Towing	0.00
Gross Total (S$)	**2,284.30**
+ GST 7.00% (S$)	159.90
Nett Amount (S$)	**2,444.20**

This claim is handled by: LIM KWOK ENG

*Generated using **Merimen e-Claims Internet Estimation & Adjusting System***

REPAIR DETAILS

Reference

Part Source:	MRM-SG	Version: 1.0 (Last Synchronised: 06 Jan 2020)
Parts:	143	HYUNDAI I40 1.7 D CRDi (A) (Catalogue:Merimen Singapore 1.0)
Labour:	Repairer's	(Price-denominated Standard List)
Print Code:	**ComfortDelGro Engineering Pte Ltd/SHB4356S/06/01/2020 19:56**	
Validity:	These estimates are valid only if they contain the print code (above) on all estimate pages, running page numbers with the END OF ESTIMATES marker on the last estimate page	
Further Info:	Items/values not in reference catalogue are prefixed with an asterisk *.	

Estimates on Parts

No.	Qty	Part No.	Particulars	%Disc	%Depr	Amount
1	1		***REAR BUMPER COVER** DEF	20.00	0.00 DEF	*503.00 FL
2	10		***REAR BUMPER CLIPS** rec	20.00	0.00 rec	*22.00 FL
3	1		***REAR BUMPER UNDER COVER** xhr	20.00	0.00	*228.00 FL xhr
4	1		***BOOTLID I40 EMBLEM** rec	20.00	0.00 rec	*22.00 FL
5	1		***BOOTLID CRDI EMBLEM** rec	20.00	0.00 rec	*22.00 FL
6	1		***REAR BUMPER REVERSE SENSOR** xhr	0.00	0.00	*135.70 F ?
7	1		***REAR BUMPER ADVERTISEMENT LOGO** rec	0.00	0.00 rec	*50.00 F
8	1		***REAR FENDER ADVERTISEMENT LOGO RH** rec	0.00	0.00 rec	*100.00 F
9	1		***REAR FENDER ADVERTISEMENT LOGO LH** rec	0.00	0.00 rec	*100.00 F

F=Franchise part. L=ListItemDisc.

Sub Total (S$)	**1,182.70**
- List Item Discount on L Items (S$)	159.40
Total Parts (S$)	**1,023.30**

ComfortDelGro Engineering Pte Ltd/SHB4356S/06/01/2020 19:56. Not valid without Reference section.
Generated using **Merimen e-Claims IEAS**

Estimates on Miscellaneous Items

No	Qty	Particulars	Amount
Miscellaneous Items			
1	1	**OD/TP Case (Insurer)**	11.00
		Sub Total (S$)	**11.00**

Estimates on Labour

No	Particulars	Lab.Type		Amount
Labour Items				
1	**PANEL BEATING**	New	560	600.00
2	**SPRAY PAINTING CHARGE**	New		400.00
3	**WIRING CHARGE**	New		50.00 xhn
4	**TUFF KOTE**	New	30	80.00
5	**REMOVE/REFIX REVERSE SENSOR**	New	50	120.00
		Gross Labour Cost (S$)		**1,250.00**

ComfortDelGro Engineering Pte Ltd/SHB4356S/06/01/2020 19:56. Not valid without Reference section.
Generated using **Merimen e-Claims IEAS**

< END OF ESTIMATES >

...CLAIM SUBFOLDER...(Pending for Survey Report)

CLAIM SUBFOLDER TRACKING

Case	Notified	Est Submitted	Adj Assigned	Adj Rpt	Adj Submitted	Ins Auth'ed	Status
Main	06 Jan 2020 19:47 Sendback Est	06 Jan 2020 19:56 **S$2,284.30**	07 Jan 2020 09:29 Edit Adj Rpt	**S$1,400.00** Edit Estimates	**S$1,400.00** View Rpt		**Pending for Survey Report** Cancel Case

Main | Reference | Claim Details | Documents | Show All

CLAIM SUBFOLDER DETAILS

Insured:	**LION CITY RENTALS PTE LTD**, Co. Reg. No.: 201504621K		
Main Claimant:	**CTPL**		
Vehicle Reg. No.:	**SHB4356S**	Date of Loss:	05/01/2020 17:00 - :59 [**54** Months and **11** Days From LTA Reg Date (Man Yr)]
Claim Type:	**TP** / M2000137	Policy/Cover Note No.:	MK000578 (Third Party Only) Coverage: 25/06/2019 - 24/02/2020
Vehicle Reg. No. (Insured):	**SLF9710B**	Policy No. (Claimant):	
		Excess:	S$1,600.00
Repairer:	**ComfortDelGro Engineering Pte Ltd (Loyang)** 59 Loyang Drive, 508969 Loyang - Tel: 6214 8300		
Handling Insurer:	**Tokio Marine Insurance Singapore Ltd (HQ)** - Tel: 6221 6111 ... [Handled by **Telma Gomez** - 65926402]		
Adjuster:	**LKK Auto Consultants Pte Ltd (HQ)** - Tel: 6256-3561 ... [Handled by **PARASURAM SHANMUGAM**] ... [**Final Rpt** due 16/01/2020]		

ASSOCIATED MAIL RECEIVED View All | Compose Case Mail

There are no mail for this case.

ALL ASSOCIATED TASKS View All | Search Tasks | Create New Task | Complete

Due Date	Priority	Type	Task Group	Subject	Handler	Assigned By	Completed On	Created On	Done?

No results.

Claim Documents

SHB4356S (M2000137)
[SLF9710B]
TP
CTPL
Jan 5 2020 5:00PM
[LION CITY RENTALS PTE LTD]
ComfortDelGro Engineering Pte Ltd

Upload Documents | Upload Photos | Compose New Letter

View: View in Browser

Assessment Reports			1 per page		☑
No	Finalized On	**ComfortDelGro Engineering Pte Ltd (Loyang)**		**Thumbnail**	**Print**
1	06/01/20 19:56	**Repairer Estimates**	i	Load HTM	
No	Finalized On	**LKK Auto Consultants Pte Ltd (HQ)**		**Thumbnail**	**Print**
1	07/01/20 13:56	**Adjuster Immediate Advice**	i	Load HTM	

Photos/Images			3 per page		☑
No	**Relabel/Reorder**	**LKK Auto Consultants Pte Ltd (HQ)**		**Thumbnail**	**Print**
1	13/01/20 17:56	**General View**	i	Load JPG	☑
2	13/01/20 17:56	**General View**	i	Load JPG	☑
3	13/01/20 17:56	**General View**	i	Load JPG	☑
4	13/01/20 17:56	**General View**	i	Load JPG	☑
5	13/01/20 17:56	**General View**	i	Load JPG	☑
6	13/01/20 17:56	**General View**	i	Load JPG	☑
7	13/01/20 17:56	**General View**	i	Load JPG	☑
8	13/01/20 17:56	**General View**	i	Load JPG	☑
9	13/01/20 17:56	**General View**	i	Load JPG	☑
10	13/01/20 17:56	**General View**	i	Load JPG	☑
11	13/01/20 17:56	**General View**	i	Load JPG	☑
12	13/01/20 17:56	**General View**	i	Load JPG	☑
13	13/01/20 17:56	**General View**	i	Load JPG	☑
14	13/01/20 17:56	**General View**	i	Load JPG	☑
15	13/01/20 17:56	**General View**	i	Load JPG	☑
16	13/01/20 17:56	**General View**	i	Load JPG	☑
17	13/01/20 17:56	**General View**	i	Load JPG	☑
18	13/01/20 17:56	**General View**	i	Load JPG	☑
19	13/01/20 17:56	**General View**	i	Load JPG	☑
20	13/01/20 17:56	**General View**	i	Load JPG	☑
21	13/01/20 17:56	**General View**	i	Load JPG	☑
22	13/01/20 17:56	**General View**	i	Load JPG	☑
23	13/01/20 17:56	**General View**	i	Load JPG	☑
24	13/01/20 17:56	**General View**	i	Load JPG	☑
25	13/01/20 17:56	**General View**	i	Load JPG	☑
26	13/01/20 17:56	**General View**	i	Load JPG	☑
27	13/01/20 17:56	**General View**	i	Load JPG	☑
28	13/01/20 17:56	**General View**	i	Load JPG	☑
29	13/01/20 17:56	**General View**	i	Load JPG	☑
30	13/01/20 17:56	**General View**	i	Load JPG	☑
31	22/01/20 10:05	**Photo After Spray**	i	Load JPG	☑
32	22/01/20 10:05	**Photo After Spray**	i	Load JPG	☑

Assessment Reports			1 per page		☑
No	Finalized On	ComfortDelGro Engineering Pte Ltd (Loyang)		Thumbnail	Print
33	22/01/20 10:05	Photo After Spray	ℹ	Load JPG	☑

Documentation			1 per page		☑
No	Finalized On	ComfortDelGro Engineering Pte Ltd (Braddell)		Thumbnail	Print
1	22/01/20 12:16	LOD, Invoice, LOR, Mileage Record, LA, LTA Search Fee	ℹ	Load PDF	
No	Finalized On	ComfortDelGro Engineering Pte Ltd (Loyang)		Thumbnail	Print
1	06/01/20 19:57	E-filed GIA report	ℹ	Load PDF	
No	Finalized On	Tokio Marine Insurance Singapore Ltd (HQ)		Thumbnail	Print
1	07/01/20 09:23	OI SLF9710B - SCENE PHOTOS OF TPV 1 From:SC - Reg. No: SLF9710B, Claimant: LION CITY RENTALS PTE LTD	ℹ	Load JPG	☑
2	07/01/20 09:23	OI SLF9710B - SCENE PHOTOS OF TPV 2 From:SC - Reg. No: SLF9710B, Claimant: LION CITY RENTALS PTE LTD	ℹ	Load JPG	☑

Documents Checklist

DOCUMENTS CHECKLIST	Reset	Save	Print
There are no document checklists configured.			

Our Checklist Remarks - LKK Auto Consultants Pte Ltd (HQ)

Show Remarks To: ☐ Repairer ☐ Handling Insurer

Note: Remarks are private unless you show it to other parties.

LKK Auto Consultants Pte Ltd (Co.Reg.No:199607198R)
51 Ubi Ave 1 #01-25, Paya Ubi Industrial Park
Singapore 408933
Tel: 6256-3561 Fax: 6844-8805 Email: sur@lkkauto.com;assignments@lkkauto.com

VEHICLE DAMAGE INSPECTION REPORT

Our File No: CS/TMI20000374/FQD3E2
Date: 30/01/2020

REFERENCE

Handling Insurer:	Tokio Marine Insurance Singapore Ltd	Policy No:	MK000578		
Claimant Vehicle No :	SHB4356S	**Insured Vehicle No :**	SLF9710B		
Date of Loss:	05/01/2020	Nature of Claim:	TP	Claim No:	M2000137

DESCRIPTION & IDENTIFICATION OF VEHICLE

Reg No:	**SHB4356S**		
Make & Model:	HYUNDAI I40, 1.7 D CRDi (A)	Engine No:	D4FDFU528760
Reg. Date:	25/06/2015 (Man. Year: 2015)	Chassis No:	KMHLB41UMGU075122
Colour:	Blue	Odometer:	570186 km
Engine Capacity:	1685 cc		
Market Value/New Car Price:	N/A		
Sum Insured (S$):	**Market Value/New Car Price**		

CONDITION OF VEHICLE AT THE TIME OF SURVEY

General Condition:	Good	Steering (Serviceable):	Yes	Footbrake (Serviceable):	Yes
Handbrake (Serviceable):	Yes	Engine Modification:	No	Pre-accident Condition:	Good

CONDITION OF TYRES

Front Tyre Size:	205/60 R16	Rear Tyre Size:	205/60 R16
Front Left Side:	West Lake 6 mm	Rear Left Side:	West Lake 6 mm
Front Right Side:	West Lake 6 mm	Rear Right Side:	West Lake 6 mm

The above values represent the remaining tyre treads depth

COST OF CLAIMS	Repairer's	Adjuster's	Difference	Diff %
Parts	1,023.30	705.20	318.10	31.09
Miscellaneous Items	11.00	11.00	0.00	0.00
Labour	1,250.00	1,040.00	210.00	16.80
Paintwork Labour	0.00	0.00	0.00	
Towing	0.00	0.00	0.00	
Calculated Gross Total (S$)	**2,284.30**	**1,756.20**	**528.10**	**23.12**
Approved Total (Overridden) (S$)		**1,400.00**		
(S$)	2,284.30	1,400.00	884.30	38.71
+ GST 7.00/7.00% (S$)	159.90	98.00	61.90	38.71
Nett Amount (S$)	**2,444.20**	**1,498.00**	**946.20**	**38.71**

INSPECTION

Date of Assignment:	07/01/2020	Present Location:	ComfortDelGro Engineering Pte Ltd (Loyang)
Date Inspected:	06/01/2020	Inspected At:	ComfortDelGro Engineering Pte Ltd (Loyang) 59 Loyang Drive Singapore 508969
Estimated Period of Repair:	2.0 days		

Adjuster: PARASURAM SHANMUGAM **Manager:** SHIAU CHAN

NOTE: This report represents our findings at the time and place of inspection stated herein. Such inspection has been carried out to the best of our knowledge and ability but any other liability under any other circumstances is hereby expressly excluded.

REPAIR DETAILS

Reference

Part Source:	MRM-SG	Version: 1.0 (Last Synchronised: 23 Jan 2020)
Parts:	143	HYUNDAI I40 1.7 D CRDi (A) (Catalogue:Merimen Singapore 1.0)
Labour:	Repairer's	(Price-denominated Standard List)
Print Code:	(Unsubmitted, no print-code for SHB4356S)	
Validity:	These estimates are valid only if they contain the print code (above) on all estimate pages, running page numbers with the END OF ESTIMATES marker on the last estimate page	
Further Info:	Items/values not in reference catalogue are prefixed with an asterisk *.	

Recommended Parts

No.	Qty	Part No.	Particulars	Condition	Repairer's	Reference	Amount
1	1		***REAR BUMPER COVER**	Deformed	503.00 FL	-	*503.00 FL
2	10		***REAR BUMPER CLIPS**	Necessary	22.00 FL	-	*22.00 FL
3	1		***REAR BUMPER UNDER COVER**	Not Necessary	228.00 FL	-	*- FL
4	1		***BOOTLID I40 EMBLEM**	Necessary	22.00 FL	-	*22.00 FL
5	1		***BOOTLID CRDI EMBLEM**	Necessary	22.00 FL	-	*22.00 FL
6	1		***REAR BUMPER REVERSE SENSOR**	Not Necessary	135.70 F	-	*- F
7	1		***REAR BUMPER ADVERTISEMENT LOGO**	Necessary	50.00 F	-	*50.00 F
8	1		***REAR FENDER ADVERTISEMENT LOGO RH**	Necessary	100.00 F	-	*100.00 F
9	1		***REAR FENDER ADVERTISEMENT LOGO LH**	Necessary	100.00 F	-	*100.00 F

F=Franchise part. L=ListItemDisc.

Sub Total (S$)	**1,182.70**	**819.00**	
- List Item Discount on L Items 20.00/20.00% (S$)	159.40	113.80	
Total Parts (S$)	**1,023.30**		**705.20**

Report was unsubmitted during this print-out.

Recommended Miscellaneous Items

No	Qty	Particulars	Repairer's	Amount
Miscellaneous Items				
1	1	**OD/TP Case (Insurer)**	11.00	11.00
		Sub Total (S$)	**11.00**	**11.00**

Recommended Labour

No	Particulars	Lab.Type	Repairer's	Amount
Labour Items				
1	**PANEL BEATING**	New	600.00	560.00
2	**SPRAY PAINTING CHARGE**	New	400.00	400.00
3	**WIRING CHARGE**	New	50.00	0.00
4	**TUFF KOTE**	New	80.00	30.00
5	**REMOVE/REFIX REVERSE SENSOR**	New	120.00	50.00
		Gross Labour Cost (S$)	**1,250.00**	**1,040.00**

Report was unsubmitted during this print-out.

< END OF ESTIMATES >