15/5/2010

INS. CASE OWNER: CC 3, CTI 1900 1600, K1 fa3

LKK:
IDAC:

ASSIGNMENT

Surveyor: AWK DOI: 23/1/19 Date / Time : 23/1/19

Registered in Merimen: —

Pre-assign / CCU / FTE

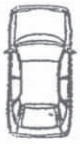

Insured Vehicle No. : SGD 6668E Claim No. :

Name of Insured : Policy No. :

Insured Tel No. : HP: Make / Model :

Excess Sec II :S$ D.O.A : 22/1/19 Place of Accident :

Is driver the owner? (YES / NO) Nature of Accident :

If **NO**, Driver Name / Age : OI GIA REPORT: YES / NO ; TP GIA REPORT: YES / NO

Driver Tel No. : (V/L: YES / NO) Insured Liability : % **Final ? Yes / No**

SHD 6890S → → →

INSRS: WSP: Tel : Liability : RMKS: CWLF 10 years.

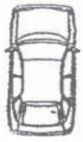

INSRS: WSP: Tel : Liability : RMKS:

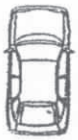

INSRS: WSP: Tel : Liability : RMKS:

INSRS: WSP: Tel : Liability : RMKS:

Date/ Time	
	SHD 6890S - X ; SGD 6668E - X

STAGE	DATE / PIC
Non-Reporting ltr (1st):	
Non-Reporting ltr (2nd):	
Non-Reporting ltr (Final):	
Notification ltr (if non-pickup):	
Call OI:	
After call ltr to OI:	

Documentation Check List:	Handler	Typist
Notification ltr (if non-pickup)		
After call ltr to OI:		
Authorisation To Act:		
Release Voucher:		
Final Repair Bill:		
Car Rental Invoice:		
Towing Invoice		
LTA / GIA :		
Medical Bill:		
PIR:		
Mandate/Reject Instruction:		
LOD		
Payment Breakdown Form:		
Post-Repair Photos:		
Others:		

PRELIMINARY ADVICE	Date/Time:	Sent By:	
FINALIZATION	Date/Time:	Confirm with:	Confirm by:
Repair Cost:	S$ (days)	Reduction: %	Email Call
FINAL SETTLEMENT	Date/Time:	Confirm with	Email Call
Final Liability:	% (Agreed / Assessed)	BOLA S/N No. :	If NO or B 28, Ass. Lia :
Repair Cost:	S$		
Loss of Rental (LOR):	S$ (days)		
Loss of Use (LOU):	S$ ($ x days)		
Loss of Income (LOI):	S$ ($ x days)		
LOR only LOU only	LOR + LOU LOR + LOI	**[Tick only one]**	
GIA/LTA Search	S$		
Medical:	S$		1) Claim status: Normal/Reject/Private Settle
Disbursement:	S$	(e.g. Tow/ Independent)	2) Report Format:
Legal Cost	S$		3) Survey fee:
Total:	**S$**	**Global Sum S$:**	
FINAL PAYMENT	Date/Time:	Confirm with:	Email Call
Payee 1:	S$	Name 1:	
Payee 2: (Strike if N.A.)	S$	Name 2:	
Payee 3: (Strike if N.A.)	S$	Name 3:	

Surveyor: Kelvin | REF:

ASSIGNMENT

From: _____ Date: _____

Estimated Cost: _____

OD / TP / WS / TP RES / OD RES / EVA / INV / MV

To Inspect Vehicle No: _____

At Workshop m/s _____

of _____

Insured: _____

Policy No. _____

Claims No. _____

Sum Insured: _____ Excess: _____

(Client's Record)

Make of Veh: _____

(Policy Condition)

Remark: The veh had commenced its repair at the time of inspection.

N/S	O/S

Bal. or Market Value: _____

IDAC Accident Rport: _____ Consistent? : Yes or No

GIA / PR Seen: _____ Consistent? : Yes or No

Est. Repairs: _____ days Res.: Yes or No

Lum Sum: _____ % 3 Val.: Yes or No

CA / REV / REP. / 24 HRS

Vehicle: IN / OUT

Date: _____ Person Contacted: _____

Veh No: SHD 6890S Yr Regn: 8 Oct / 2015

Type: M.Car / M.Cycle / Bus / Van / Lorry / Taxi / Prime Mover / Truck / Trailer or

Make: Hyundai Z40 c.c 1685

Colour Blu A/C: Insured / Std / NI / NA

Sp.Reading 39 3328 T/Radio: Insured / Std / NI / NA

Eng/No: _____

C/No: KMHLB81UAG4078476

Gen. Cond: Good / Fair / Poor / Burnt

Steering: In order / Jammed / Leaked / Burnt or _____

Brake: In order / Jammed / Leaked / Burnt or _____

Modi: Nil / S/Rim / STD A/Rim or _____

Tyre Size; F: 205/60R16

R: _____

BS / DUN / EXNOVA / GY / FS / LIZA / MIC / OHTSU / PIR / SUMI / TOYO / YOKO or Westlake

Front		Rear	
R/Bal.	7 mm	R/Bal.	7 mm
L/Bal.	7 mm	L/Bal.	7 mm
D.O.A.	22/1/19	D.O.I.	23/1/19

Survey held at CDGE (Loyang)

Des. of Damages : Frt / Rear / O/S / N/S / U/C / Rooftop or Rear o/s

The U/C / Chassis frame / Body Structure affected due to collision.

Date / Time	Action / Instruction
	CTZ
	4s

Date/Time, File Pass to? _____

1) _____

Date/Time, File Return to?

2) _____

☐ : Preli. Report

☐ : Final Report

Days Of Repair: _____

Resurvey No. of Trip: _____

Add Fee: ☐ : Site Insp ($ _____)

☐ : Interview ($ _____)

☐ : Tech. Invs ($ _____)

☐ : Weekend ($ _____)

Report Format : _____

Lump Sum / LBI: $ _____

Survey Fee:	
Transportation:	
___$ + RS.___SI	
Photos	
Others	

COMFORTDELGRO ENGINEERING

A member of COMFORTDELGRO

ComfortDelGro Engineering Pte Ltd
205 Braddell Road Singapore 579701
Mainline + 65 6383 6280 Facsimile + 65 6280 9755
Workshops
59 Loyang Drive Singapore 508969
383 Sin Ming Drive Singapore 575717
45 Pandan Road Singapore 609286
320 Ubi Road 3 Singapore 408849
24 Senoko Loop Singapore 758156
7 Sungei Kadut Way Singapore 728791
501 Yishun Industrial Park A Singapore 768733

Date/Time: 23.01.2019 13:10 Page : 1

Team: ARC Repair TP(CLSO)1

JOB CARD

Sales Order:

JC NO.: 305262704

STOMER

/MS COMFORT TRANSPORTATION PTE LTD
STOMER NO. 7010045
DRESS 383 SIN MING DRIVE
Singapore SINGAPORE 575717
– (R) 65508755 (O)
(P)

COUNT CARD NO.

REGN NO.: SHD6890S	MILEAGE
MAKE : HYUNDAI	FUEL E.....1/2.....F
MODEL I-40	DATE/TIME IN 23.01.2019 08:30
YR OF MANU. 08.10.2015	TARGET DATE
CHASSIS CODE KMHLB41UMGU078416	COMPLETION DATE/TIME:

JOB DESCRIPTION

Accident Date: 22.01.2019
NATURE: 3P 22.01.2019

S/NO LABOR CODE DESCRIPTION

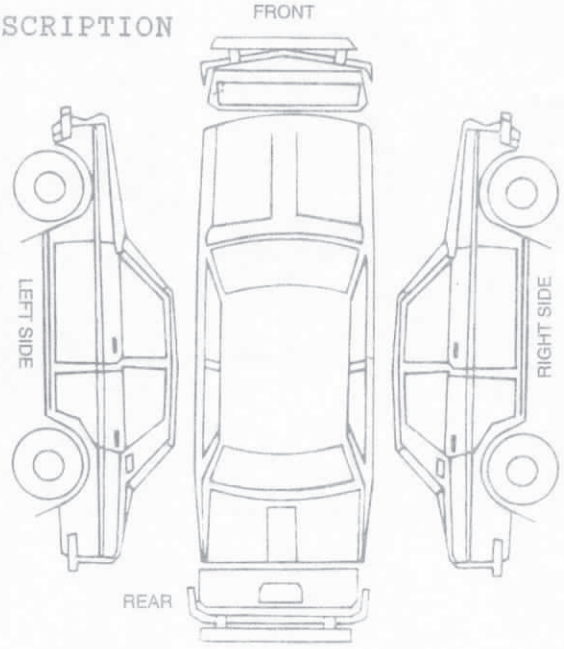

ECKED & PASSED OUT BY:

SERVICE ADVISOR

CUSTOMER'S SIGNATURE

wledgement Slip

.:
e No.: SHD6890S

CHIANG

of Service Advisor

Signature/Date

eturned to Service Reception upon collection

Exit Pass

Vehicle No.: SHD6890S

Name of Service Advisor

Date

To be kept by Security Guard